DPDK

rte_security: An update and introducing PDCP

Akhil Goyal (NXP)

Hemant Agrawal (NXP)

DPDK Summit – Dublin- 2018

Agenda

- Rte_security – A brief recap
- PDCP - Introduction
- Rte_security – Updates for PDCP
- Protocol Error Handling
- Q&A

rte_security

A Recap

rte_security – A brief recap

- Framework for management and provisioning of hardware acceleration of security protocols.
- Generic APIs to manage security sessions.
- Net/Crypto device PMD initializes a security context which is used to access security operations on that particular device.
- Rich capabilities discovery APIs
- Currently IP Security (IPsec) protocol is supported.
- Could support a wide variety of protocols/applications
  - Enterprise/SMB VPNs — IPsec
  - Wireless backhaul — IPsec, PDCP
  - Data-center — SSL
  - WLAN backhaul — CAPWAP/DTLS
  - Control-plane options for above — PKCS, RNG

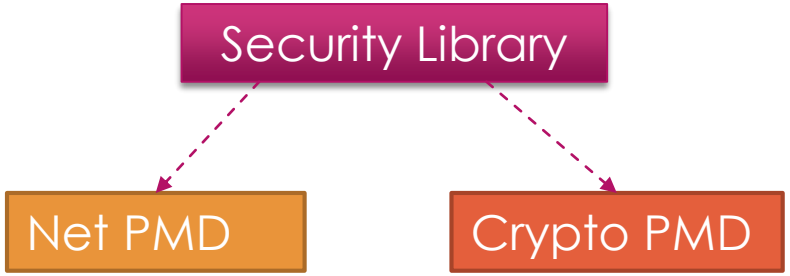

A multi-device API (Object Model)

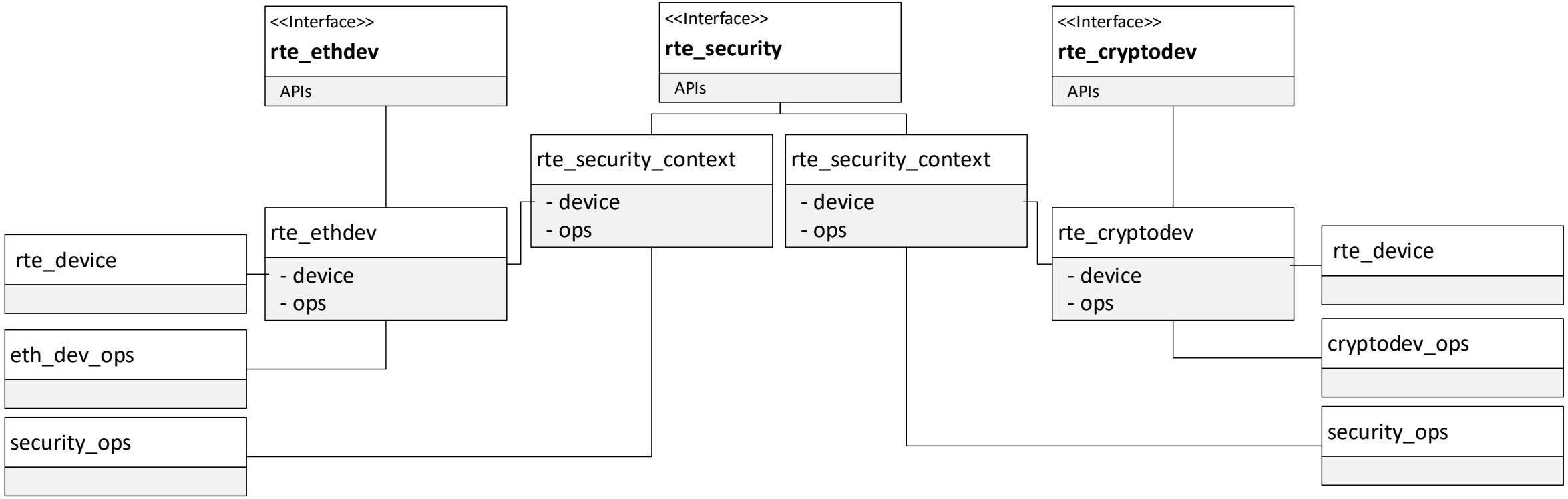

Protocols and actions

- Select the session Protocol: "rte_security_session_protocol"
  - IPSEC, MACSEC, SSL, PDCP etc.
- Select the Security Action Type: "rte_security_session_action_type"
  - `RTE_SECURITY_ACTION_TYPE_INLINE_CRYPTO: Inline crypto processing as NIC offload during recv/transmit.`
  - `RTE_SECURITY_ACTION_TYPE_INLINE_PROTOCOL:  Inline security protocol processing as NIC offload during recv/transmit.`
  - `RTE_SECURITY_ACTION_TYPE_LOOKASIDE_PROTOCOL: Security protocol processing including crypto on a crypto accelerator.`
- Action type can be an input for the given application during session creation
- Based on the action type and other session related information, application configures session parameters for security offload.

IPSEC - Encrypt Packet Processing

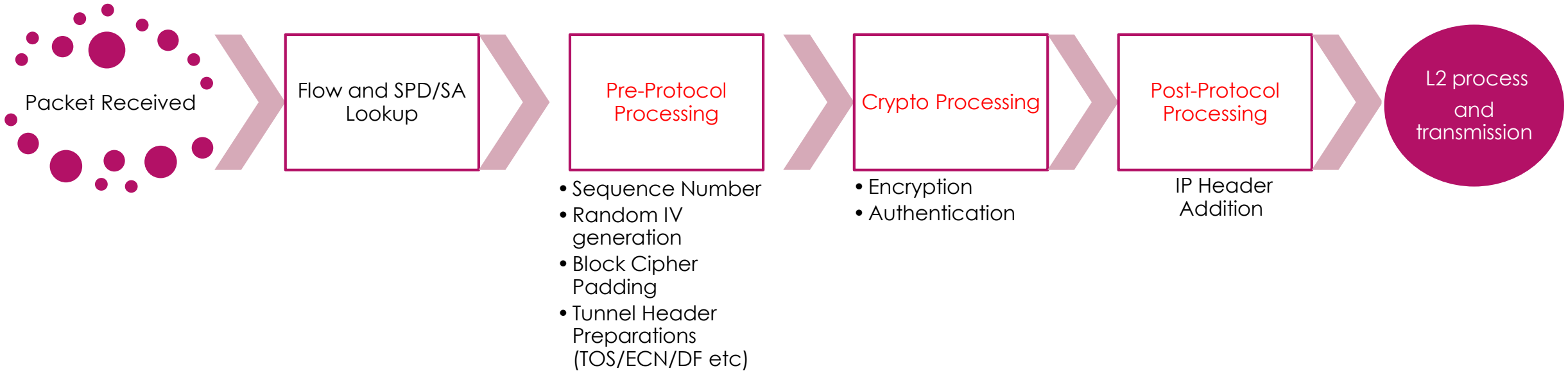

Security APIs

- Get device context

```
void *rte_cryptodev_get_sec_ctx(uint8_t dev_id)
void *rte_eth_dev_get_sec_ctx(uint8_t port_id)
```

- Create Session

```
struct rte_security_session * rte_security_session_create(
            struct rte_security_ctx *instance,
            struct rte_security_session_conf *conf,
            struct rte_mempool *mp);
```

- Update (`rte_security_session_update`)
- Destroy (`rte_security_session_destroy`)
- Get Stats (`rte_security_session_stats_get`)
- Get userdata (`rte_security_get_userdata`)
- Set pkt metadata (`rte_security_set_pkt_metadata`)
- Attach session with crypto_op (`rte_security_attach_session`)

```
/* Security context for crypto/eth devices */
struct rte_security_ctx {
        void *device;
        /**< Crypto/ethernet device attached */
        const struct rte_security_ops *ops;
        /**< Pointer to security ops for the device */
        uint16_t sess_cnt;
        /**< Number of sessions attached to this context */
};
/** security session configuration parameters */
struct rte_security_session_conf config = {
     .action_type = RTE_SECURITY_ACTION_TYPE_INLINE_CRYPTO,
     /**< Type of action to be performed on the session */
     .protocol = RTE_SECURITY_PROTOCOL_IPSEC,
     /**< Security protocol to be configured */
     .ipsec = {
          .spi = /**< Security Protocol Index */,
          .salt = /** Salt value */,
          .direction = RTE_SECURITY_IPSEC_SA_DIR_INGRESS,
          .proto = RTE_SECURITY_IPSEC_SA_PROTO_ESP,
          .mode = RTE_SECURITY_IPSEC_SA_MODE_TUNNEL
     },
     /**< Configuration parameters for security session */
     .crypto_xform = /** crypto transforms */
     /**< Security Session Crypto Transformations */
     .userdata = /** Application specific User data */
};
```

PDCP

Packet Data Convergence Protocol

PDCP- Features

- Transfer of Data (C-Plane and U-Plane) between RLC and Higher U-Plane interface
- Maintenance of PDCP SN(Sequence Number)
- Transfer of SN Status (for use Upon Handover)
- ROHC (Robust Header Compression)
- In-Sequence delivery of Upper Layer PDUs at re-establishment of lower layer
- Elimination of duplicate of lower layer SDUs at re-establishment of lower layer for RLC AM
- Ciphering and Deciphering of C-Plane and U-Plane data
- Integrity Protection and Integrity verification of C-Plane Data
- Timer based Discard
- Duplicate Discard

Where PDCP fits in LTE Radio Protocol stack??

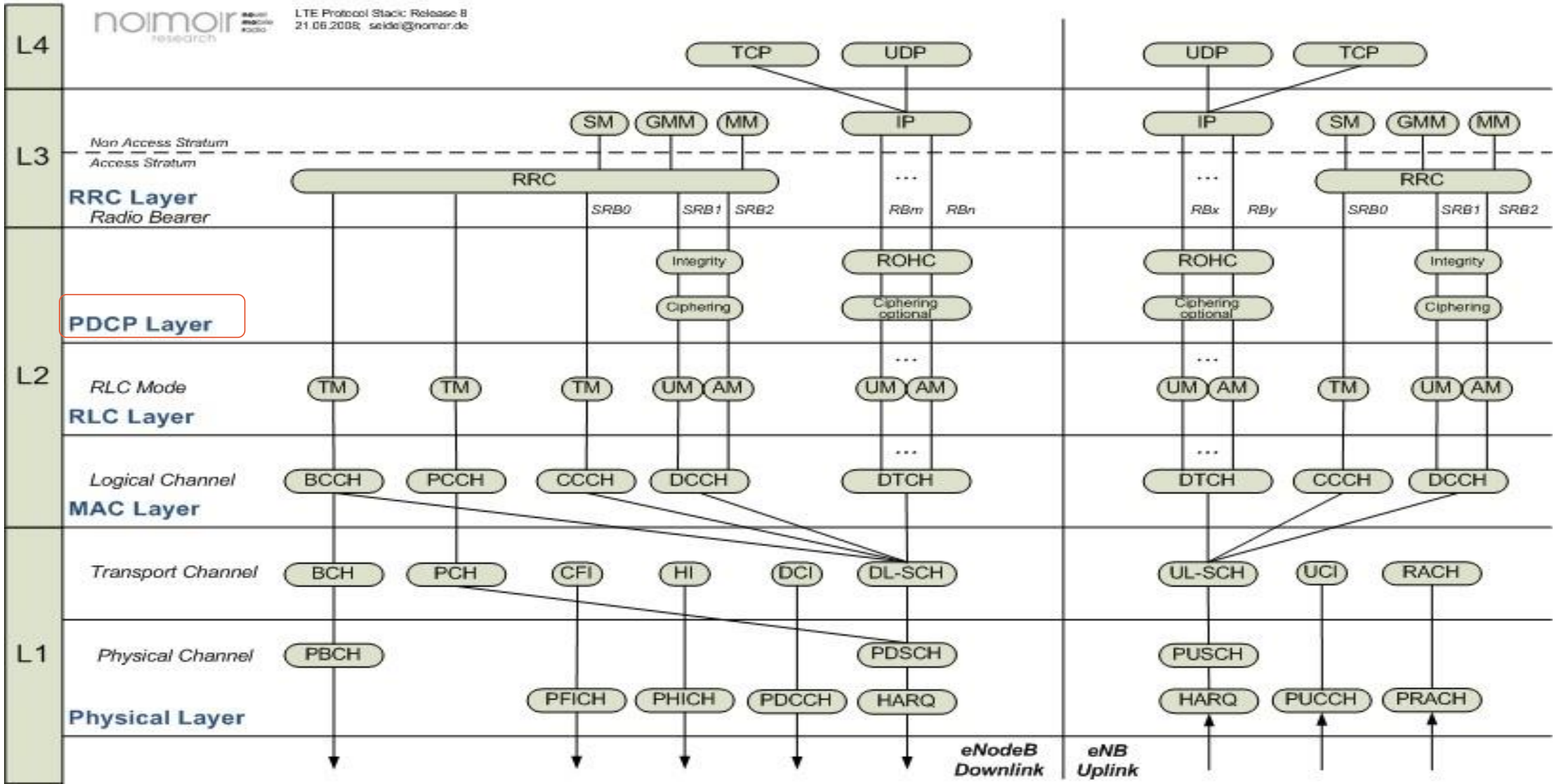

PDCP sublayer functional view

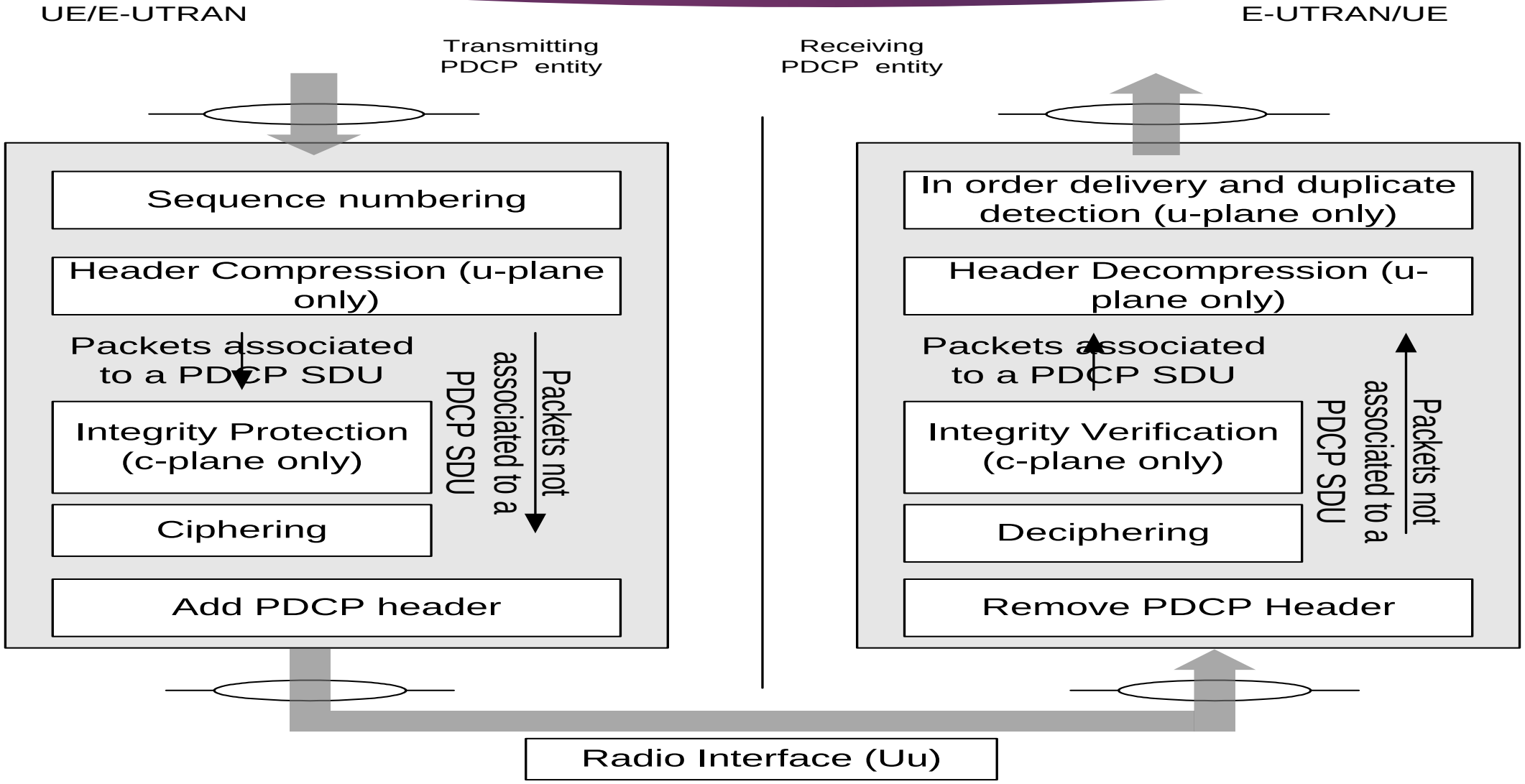

Integrity protection and verification

- Pure computation function to protect transmitted data against a non-authorised third-party from alteration.
- Applies on header and data part of SRB1 and SRB2 PDU in CP.
- Security Control Information Element "*IntegrityProtAlgorithm* " of RRC contain 4 bit field:
  - '0001' – SNOW 3G based algorithm (128-EIA1)
  - '0010' – AES based algorithm (128-EIA2)

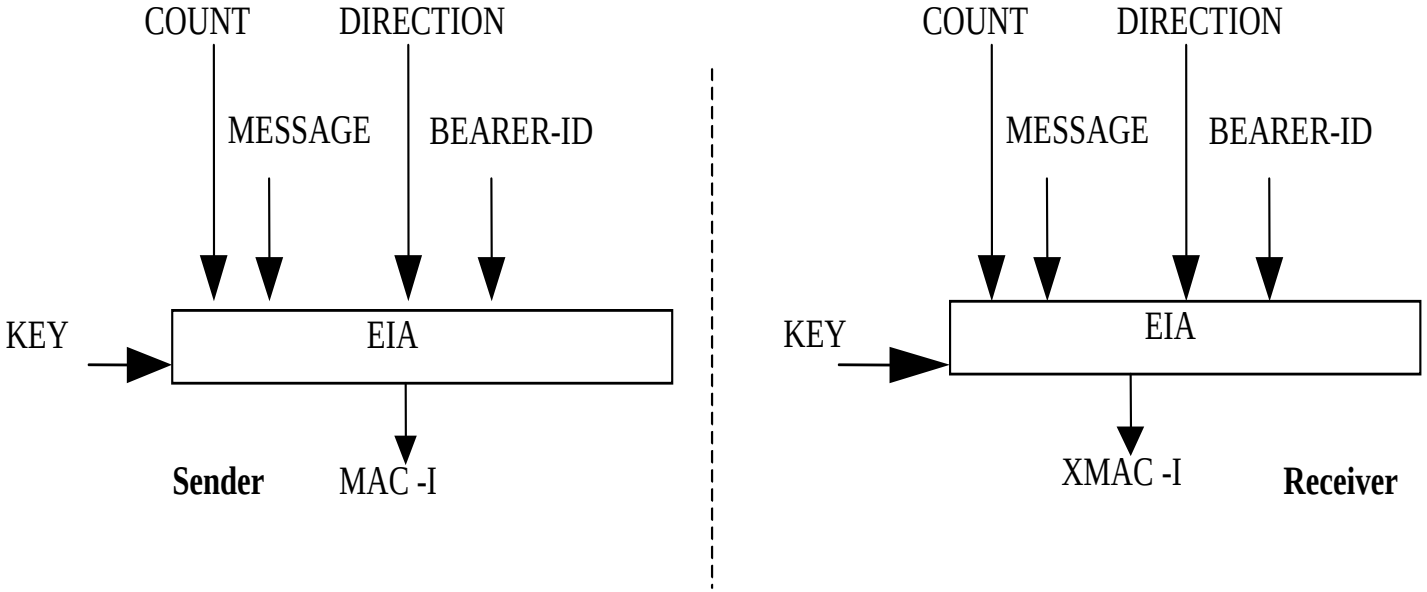

Ciphering and Deciphering

- CP: Ciphers/deciphers data part and MAC-I of PDCP data PDU.
- UP: Ciphers/deciphers data part of PDCP data PDU.
- Algorithm common for CP and UP
- Security Control Information Element "*CipheringAlgorithm* "of RRC contain 4 bit field:
  - '0000' – no ciphering (EPS Encryption Algo, EEA0)
  - '0001' – SNOW 3G based algorithm (128-EEA1)
  - '0010' – AES based algorithm (128-EEA2)

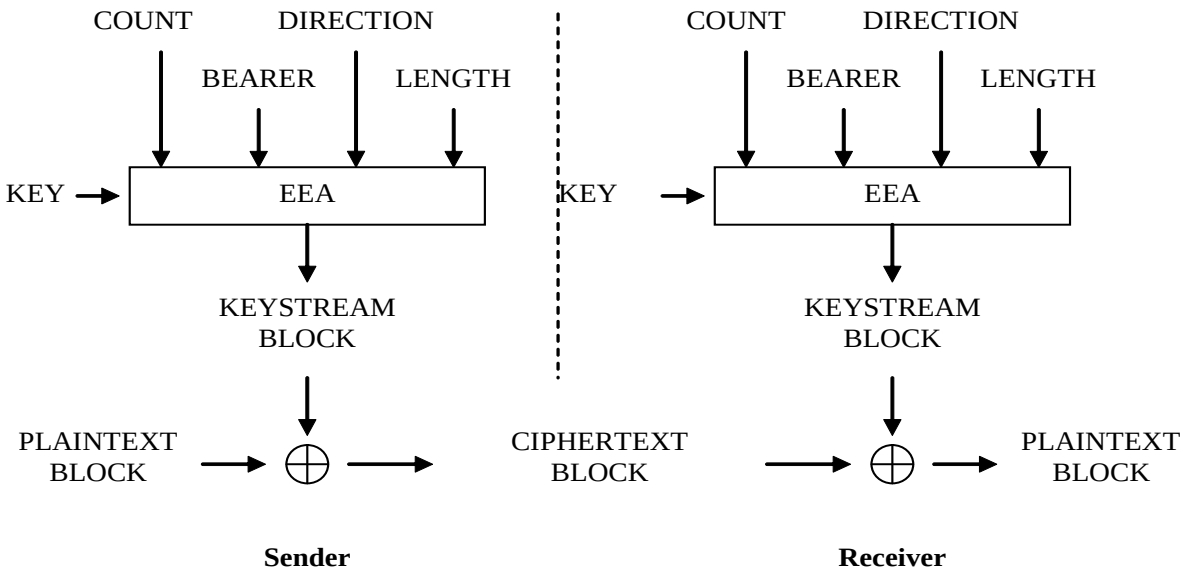

Header compression/decompression

- Applies on U-plane PDCP SDU using RoHC framework
- Compression principles used:
  - Remove redundancy between header field values within packets.
  - Remove redundancy between consecutive packets belonging to same flow.
- Generates two types of output data:
  - Compressed packets, each associated with one PDCP SDU.
  - Standalone interspersed packets, ROHC feedback packet, not associated with a PDCP SDU

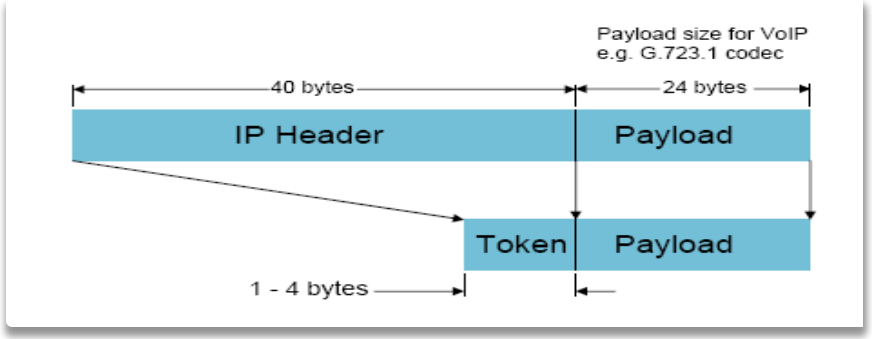

PDCP sequence number options

- Depending on the type of packet, different Sequence numbers are chosen.
  - Control plane PDCP Data PDU (5 Bits)
  - User plane PDCP Data PDU with long PDCP SN (12 bits)
  - User plane PDCP Data PDU with short PDCP SN (7 bits)
  - User plane PDCP Data PDU with extended PDCP SN (15 bits)

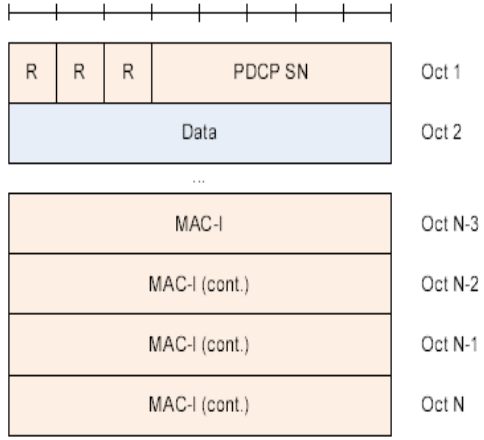

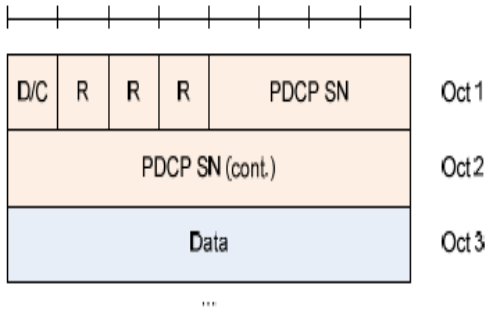

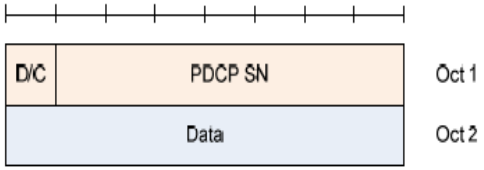

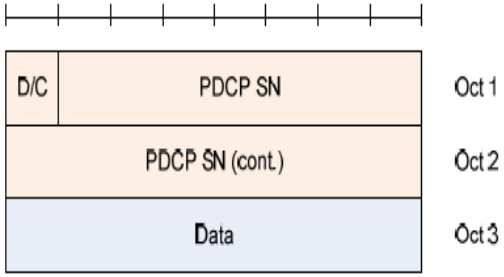

PDCP – Basic / Complicated

- PDCP can do ciphering, integrity, header compression.
- But it may have certain messages which do not require any ciphering, integrity, header compression.
- It can be as simple as null – cipher, null – auth, no header compression
- It can be as complicated as cipher (with ZUC, snow-3g) and auth (with AES-CMAC, ZUC etc)
- PDCP has evolved from basic Release 8 to complicated Release 13 of 3GPP.

Current proposal for rte_security is for supporting cipher and auth operations with PDCP header(lookaside)

rte_security -revisit

Updates for PDCP

rte_security – Update for PDCP

- Create PDCP security session using `rte_security_session_create()` with updated session configuration as follows:

```
struct rte_security_session_conf {
        enum rte_security_session_action_type action_type;  /**< Type of action to be performed on the session */
        enum rte_security_session_protocol protocol;         /**< Security protocol to be configured */
        RTE_STD_C11
        union {
                struct rte_security_ipsec_xform ipsec;       /**< IPSec specific configurations */
                struct rte_security_macsec_xform macsec;     /**< macsec Specific configurations */
                struct rte_security_pdcp_xform pdcp;         /**< PDCP specific configurations */
        };                                                   /**< Configuration parameters for security session */
        struct rte_crypto_sym_xform *crypto_xform;           /**< Security Session Crypto Transformations */
        void *userdata;                                     /**< Application specific userdata to be saved with session */
};
```

- Here `protocol` should be `RTE_SECURITY_PROTOCOL_PDCP`.

PDCP Configuration

```
/**
 * PDCP security association configuration data.
 *
 * This structure contains data required to create a PDCP security session.
 */
struct rte_security_pdcp_xform {
        int8_t bearer;                                  /**< PDCP bearer ID */
        enum rte_security_pdcp_domain domain;           /** < PDCP mode of operation: Control or data */
        enum rte_security_pdcp_direction pkt_dir;       /**< PDCP Frame Direction 0:UL 1:DL */
        enum rte_security_pdcp_sn_size sn_size;         /**< Sequence number size, 5/7/12/15 */
        int8_t hfn_ovd;                                 /**< Overwrite HFN per operation 0:disable,1:enable */
        uint32_t hfn;                                   /**< Hyper Frame Number */
        uint32_t hfn_threshold;                         /**< HFN Threshold for key renegotiation */
};
```

PDCP Capabilities Example

```
{ /* PDCP Lookaside Protocol offload Data Plane */
        .action = RTE_SECURITY_ACTION_TYPE_LOOKASIDE_PROTOCOL,
        .protocol = RTE_SECURITY_PROTOCOL_PDCP,
        .pdcp = {
                .domain = RTE_SECURITY_PDCP_MODE_DATA,
        },
        .crypto_capabilities = pdcp_capabilities
},
```

```
{ /* PDCP Lookaside Protocol offload Control Plane */
        .action = RTE_SECURITY_ACTION_TYPE_LOOKASIDE_PROTOCOL,
        .protocol = RTE_SECURITY_PROTOCOL_PDCP,
        .pdcp = {
                .domain = RTE_SECURITY_PDCP_MODE_CONTROL,
        },
        .crypto_capabilities = pdcp_capabilities
},
```

```
static const struct rte_cryptodev_capabilities pdcp_capabilities[] =
{
        {       /* SNOW 3G (UIA2) */
                .op = RTE_CRYPTO_OP_TYPE_SYMMETRIC,
                {.sym = {
                        .xform_type = RTE_CRYPTO_SYM_XFORM_AUTH,
                        {.auth = {
                                .algo = RTE_CRYPTO_AUTH_SNOW3G_UIA2,
                                .block_size = 16,
                                .key_size = {
                                        .min = 16,
                                        .max = 16,
                                        .increment = 0
                                },
                                .digest_size = {
                                        .min = 4,
                                        .max = 4,
                                        .increment = 0
                                },
                                .iv_size = {
                                        .min = 16,
                                        .max = 16,
                                        .increment = 0
                                }
                        }, }
                }, }
        },
}
```

API Sequence

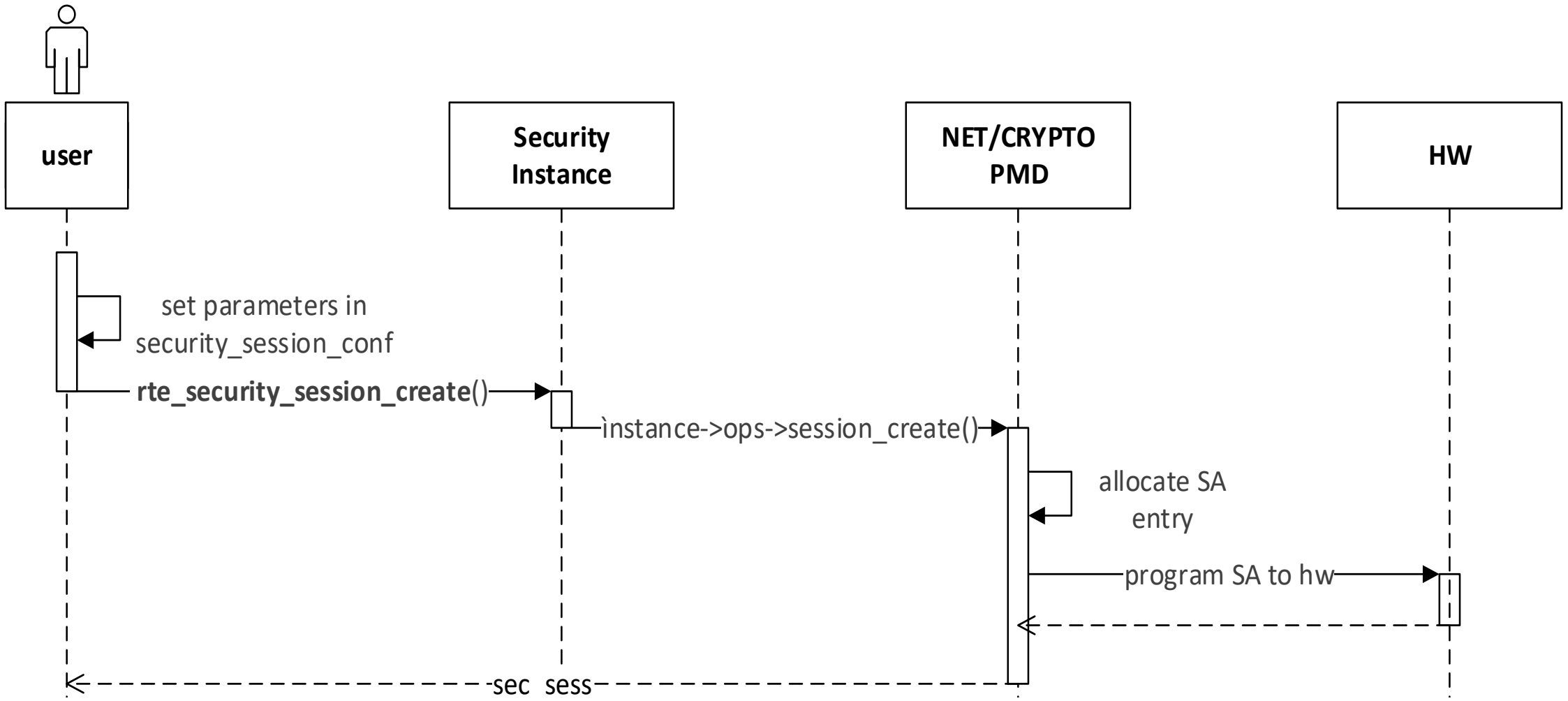

rte_security – Error handling

- Handling for protocol errors
  - Anti-replay errors, Sequence number overflow errors
  - For inline protocol – rte_eth_events can be used to pass error information to the application
  - For look-aside – Crypto errors can be extended for security errors in rte_crypto_op_status

Summary

- Rte_security can be used as a framework to support various security protocols.
- PDCP protocol is briefly discussed in this presentation
- Basic API sequence and data flow shall remain same for every protocol.
- Updates for PDCP are floated on the mailing list. Please have a look.
- PMD owners supporting PDCP shall come up and send updates for there drivers.

Future Work

- Header Compression/Decompression(RoHC) support for PDCP
- Inline crypto/protocol implementation for PDCP
- Multi process support
- Enable Event based security sessions
- Test application for PDCP
- Software equivalent enablement
  - It could be possible to offer software equivalent processing under this API, may or may not be desirable depending on protocol and it’s processing overhead.

Questions?

<Akhil Goyal, Hemant Agrawal>

<akhil.goyal@nxp.com, hemant.agrawal@nxp.com>